how to calculate the beta function

- beta function describes transverse motion of particles in synchrotrons and storage rings
- beta function formalism also may be applied to beam lines

- classic paper
  E. D. Courant and H. S. Snyder, Ann. Phys. 3, 1(1958)
- textbook
  D. A. Edwards and M. J. Syphers, Introduction to the Physics of High Energy Accelerators (Wiley, 1993)
- on-line USPAS lectures
  G. Dugan Introduction to Accelerator Physics (January, 2002)

assumptions of elementary treatment

- bending and focusing elements have a horizontal median plane
- configuration of elements has a closed orbit for particles of momentum *p*, called the reference trajectory
- motion described with accelerator coordinates *(s,x,z)*

accelerator coordinates

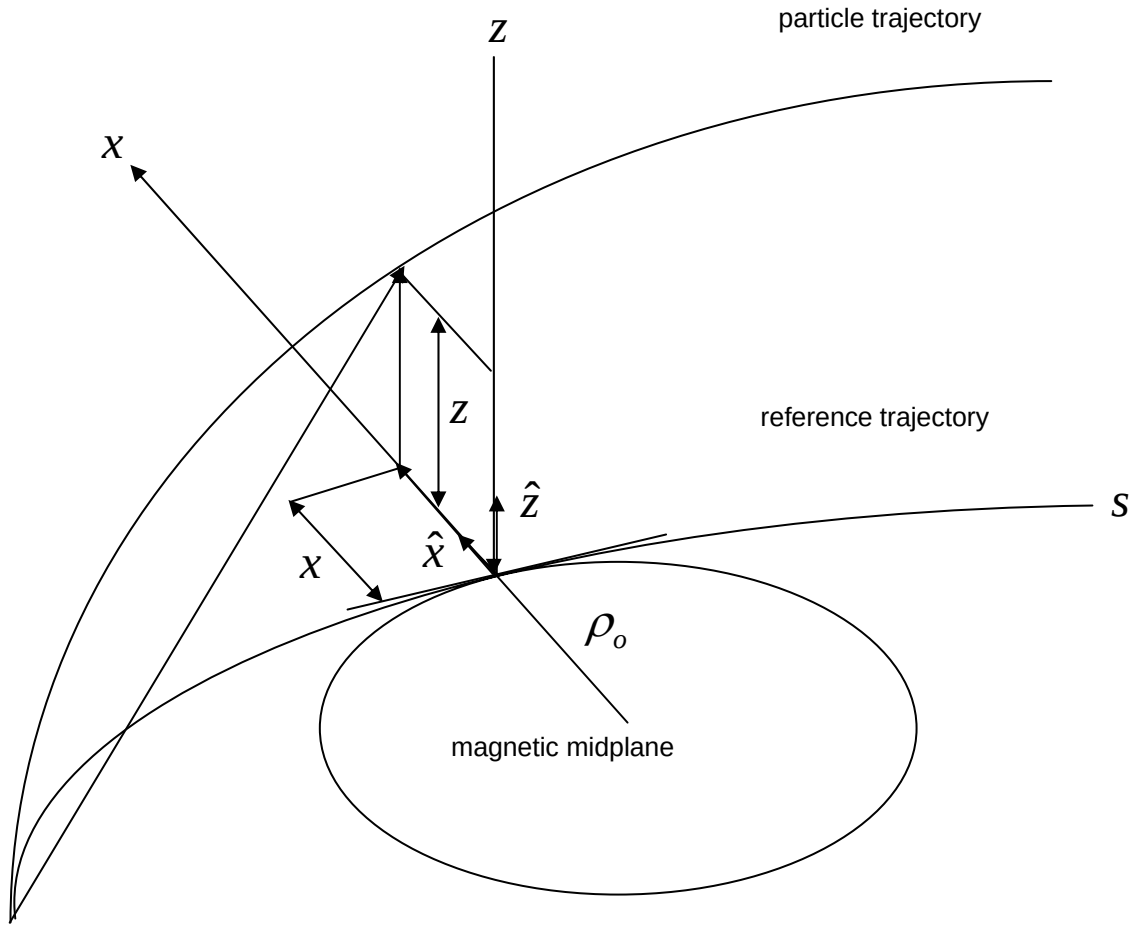

linearized equations of motion

x and *z* decoupled - use *y* for general coordinate

$$y'' + K(s)\,y = 0$$

differentiation with respect to s

$$\frac{d}{dt} = \frac{ds}{dt}\frac{d}{ds} \approx v\frac{d}{ds}$$

restoring force $K(s)$

Table 1 $K(s)$ for various magnetic elements with $B_{zo}\rho_o = \frac{p}{q}$ and

$$k = -\frac{1}{B_{zo}\rho_o}\left[\frac{\partial B_z}{\partial x}\right]_o .$$

Magnetic element	K_x	K_z
Vertical field dipole	$\frac{1}{\rho_o^{\,2}}$	0
Pure quadrupole	$-k$	k
Combined function quadrupole plus vertical dipole	$\frac{1}{\rho_o^{\,2}} - k$	k

periodicity condition

$$K(s+C)=K(s)$$

C ring circumference

$$K(s+L)=K(s)$$

L lattice period

$$L=C/N$$

matrix formalism
for

$$y'' + K(s)\,y = 0$$

$$Y(s) \equiv \begin{pmatrix} y(s) \\ y'(s) \end{pmatrix} = M(s\,|\,s_o)\,Y(s_o)$$

$$= \begin{pmatrix} a & b \\ c & d \end{pmatrix} \begin{pmatrix} y(s_o) \\ y'(s_o) \end{pmatrix}$$

initial conditions separated from transport from s_o to s

$M(s\,|\,s_o)$ depends only on $K(s)$ between s_o to s

$M\left(s \mid s_o\right)$ for various magnetic elements

$K(s)$	$M\left(s \mid s_o\right)$
$K(s) = \text{constant} > 0$	$\begin{pmatrix} \cos\phi & \frac{1}{\sqrt{K}}\sin\phi \\ -\sqrt{K}\sin\phi & \cos\phi \end{pmatrix} \quad \phi = \sqrt{K}\left(s - s_o\right)$
$K(s) = \text{constant} < 0$	$\begin{pmatrix} \cosh\phi & \frac{1}{\sqrt{-K}}\sinh\phi \\ \sqrt{-K}\sinh\phi & \cosh\phi \end{pmatrix} \quad \phi = \sqrt{-K}\left(s - s_o\right)$
$K(s) = \text{constant} = 0$	$\begin{pmatrix} 1 & \left(s - s_o\right) \\ 0 & 1 \end{pmatrix}$

application of matrix formalism

transport through successive elements give by matrix multiplication

$$M\left(s_2 \mid s_o\right) = M\left(s_2 \mid s_1\right) M\left(s_1 \mid s_o\right)$$

unit determinant

$$\det M\left(s_1 \mid s_o\right) = 1$$

transport through one cell

$$M\left(s\right) \equiv M\left(s + L \mid s\right)$$

transport through one period of *N* cells

$$\left[M\left(s\right)\right]^N$$

transport through *k* periods

$$\left[M\left(s\right)\right]^{k\,N}$$

stability condition I

all matrix elements of $M(s) = \begin{pmatrix} a & b \\ c & d \end{pmatrix}$ must remain finite as $k \to \infty$

consider eigenvalue problem $M\,Y = \lambda\,Y$

expand initial vector in eigenvectors $Y(s_o) = AV_1 + BV_2$

transport through *k* periods $M^{kN} Y(s_o) = A\lambda_1^{kN} V_1 + B\lambda_2^{kN} V_2$

eigenvalues from

$$\det\left[M - \lambda I\right] = 0 \to \lambda^2 - (a+d)\lambda + 1 = 0$$

define $\cos\mu = \frac{1}{2}(a+d) = \frac{1}{2}\operatorname{Tr} M$

stability condition II

define $\cos\mu = \frac{1}{2}\left(a+d\right) = \frac{1}{2}\mathrm{Tr}\,M$

eigenvalues are $\lambda = \cos\mu \pm i\sin\mu = e^{\pm i\mu}$

for stability

μ must be real

$$\mathrm{Tr}\,M = \left|a+d\right| \le 2$$

μ is the phase advance in one period

example - weak focusing ring

$$K_x = \frac{1-n}{R^2} \qquad K_z = \frac{n}{R^2}$$

single turn transport

$$\begin{pmatrix} \cos\left(2\pi\sqrt{1-n}\right) & \frac{R}{\sqrt{1-n}}\sin\left(2\pi\sqrt{1-n}\right) \\ -\frac{\sqrt{1-n}}{R}\sin\left(2\pi\sqrt{1-n}\right) & \cos\left(2\pi\sqrt{1-n}\right) \end{pmatrix}$$

$$\begin{pmatrix} \cos\left(2\pi\sqrt{n}\right) & \frac{R}{\sqrt{n}}\sin\left(2\pi\sqrt{n}\right) \\ -\frac{\sqrt{n}}{R}\sin\left(2\pi\sqrt{n}\right) & \cos\left(2\pi\sqrt{n}\right) \end{pmatrix}$$

$$\cos\mu_x = \cos\left(2\pi\sqrt{1-n}\right) \qquad \boxed{0 < n < 1} \qquad \cos\mu_z = \cos\left(2\pi\sqrt{n}\right)$$

CLS parameters

$$M = \begin{pmatrix} \cos\mu + \alpha\sin\mu & \beta\sin\mu \\ -\gamma\sin\mu & \cos\mu - \alpha\sin\mu \end{pmatrix} = \begin{pmatrix} a & b \\ c & d \end{pmatrix}$$

continuous solution for CLS parameters

$$y'' + K(s)\,y = 0 \quad \text{with} \quad K(s+L) = K(s)$$

homogeneous Hill's equation

phase - angle solution

$$y(s) = Aw(s)\cos\left(\psi(s) + \delta\right)$$

compare to simple harmonic motion

$$y(s) = A\cos\left(\sqrt{K}\,s + \delta\right)$$

the beta function I

assumed solution in equation of motion gives two equations

$$2w'\psi' + w\psi'' = \left(w^2\psi'\right) = 0$$

$$\downarrow$$

$$\psi' = \frac{k}{w^2} \equiv \frac{1}{\beta}$$

$$\downarrow$$

$$\psi(s) = \int_{s_o}^{s} \frac{ds}{\beta}$$

$$w'' - w\psi'^2 + Kw = 0$$

$$\downarrow$$

$$w^3\left(w'' + Kw\right) = k^2$$

$$\downarrow$$

$$2\beta\beta'' - \beta'^2 + 4K\beta^2 = 4$$

$$\downarrow$$

$$\beta''' + 4K\beta' + 2K'\beta = 0$$

$$\downarrow$$

$$\beta''' + 4K\beta' = 0 \quad \text{for} \quad K = \text{constant}$$

solutions for *K* = *0* and *K* > *0*

for $K = 0$

$$\beta''' + 4K\beta' + 2K'\beta = 0 \;\Rightarrow\; \beta''' = 0$$

$$\beta = c_1 + c_2 s + c_3 s^2$$

$$\alpha = -\frac{1}{2}\beta' = -\frac{1}{2}c_2 - c_3 s$$

$$\gamma = K\beta - \alpha' = -\alpha' = c_3$$

$$\begin{pmatrix} \alpha \\ \beta \\ \gamma \end{pmatrix} = \begin{pmatrix} 0 & -\frac{1}{2} & -s \\ 1 & s & s^2 \\ 0 & 0 & 1 \end{pmatrix} \begin{pmatrix} c_1 \\ c_2 \\ c_3 \end{pmatrix}$$

for $K > 0$

$$\beta''' + 4K\beta' + 2K'\beta = 0 \;\Rightarrow\; \beta''' + 4K\beta' = 0$$

$$\beta = c_1 + c_2 \cos\sqrt{4K}\,s + c_3 \sin\sqrt{4K}\,s$$

$$\alpha = -\frac{1}{2}\beta' = \sqrt{K}c_2 \sin\sqrt{4K}\,s - \sqrt{K}c_3 \cos\sqrt{4K}\,s$$

$$\gamma = K\beta - \alpha' \Rightarrow \gamma = c_1 K - c_2 K \cos\sqrt{4K}\,s - c_3 K \sin\sqrt{4K}\,s$$

$$\begin{pmatrix} \alpha \\ \beta \\ \gamma \end{pmatrix} = \begin{pmatrix} 0 & \sqrt{K}\sin\sqrt{4K}\,s & -\sqrt{K}\cos\sqrt{4K}\,s \\ 1 & \cos\sqrt{4K}\,s & \sin\sqrt{4K}\,s \\ K & -K\cos\sqrt{4K}\,s & -K\sin\sqrt{4K}\,s \end{pmatrix} \begin{pmatrix} c_1 \\ c_2 \\ c_3 \end{pmatrix}$$

simple analytic forms
need to determine integration constants

the beta function II

find initial conditions $\beta(s_o) \quad \beta'(s_o)$

seek periodic solution $\beta(s+L) = \beta(s)$ (Floquet's theorem)

write

$$y = A_1\sqrt{\beta}\cos(\psi) + A_2\sqrt{\beta}\sin(\psi)$$

and

$$y' = (-A_1\alpha + A_2)\beta^{-1/2}\cos(\psi) - (A_1 + A_2\alpha)\beta^{-1/2}\sin(\psi)$$

where

$$\alpha \equiv -\frac{\beta'}{2}$$

the beta function III

$$y(s_o) = y_o \quad y'(s_o) = y'_o \quad \psi(s_o) = 0$$

transport from s_o to s_1

$$\begin{pmatrix} y_1 \\ y'_1 \end{pmatrix} = \begin{pmatrix} \left(\frac{\beta_1}{\beta_o}\right)^{1/2} (\cos\Delta\psi + \alpha_o \sin\Delta\psi) & (\beta_1\beta_o)^{1/2} \sin\Delta\psi \\ -\frac{1+\alpha_o\alpha_1}{(\beta_1\beta_o)^{1/2}} \sin\Delta\psi + \frac{\alpha_1 - \alpha_o}{(\beta_1\beta_o)^{1/2}} \cos\Delta\psi & \left(\frac{\beta_1}{\beta_o}\right)^{1/2} (\cos\Delta\psi - \alpha_o \sin\Delta\psi) \end{pmatrix} \begin{pmatrix} y_o \\ y'_o \end{pmatrix}$$

for

$$\Delta\psi \equiv \int_{s_o}^{s_1} ds/\beta \qquad s_1 = s_o + L$$

$$\beta_1 = \beta_o \qquad \alpha_1 = \alpha_o$$

the beta function IV

transport through one period

$$\begin{pmatrix} \cos\Delta\psi_L + \alpha_o \sin\Delta\psi_L & \beta_o \sin\Delta\psi_L \\ -\dfrac{1+\alpha_o^{\ 2}}{\beta_o}\sin\Delta\psi_L & \cos\Delta\psi_L - \alpha_o \sin\Delta\psi_L \end{pmatrix}$$

equivalently

$$\begin{pmatrix} \cos\Delta\psi_L + \alpha_o \sin\Delta\psi_L & \beta_o \sin\Delta\psi_L \\ -\gamma_o \sin\Delta\psi_L & \cos\Delta\psi_L - \alpha_o \sin\Delta\psi_L \end{pmatrix}$$

determines the values of the CLS functions at s_o

initial values determine integration constants in analytic forms

example g-2 ring I

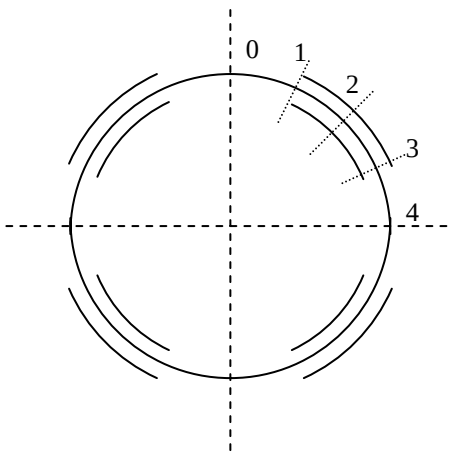

transport through one period

$$P_v = \begin{pmatrix} 0.832 & 10.288 \\ -0.030 & 0.832 \end{pmatrix}$$

$$P_h = \begin{pmatrix} 0.112 & 7.842 \\ -0.126 & 0.112 \end{pmatrix}$$

calculate CLS parameters from *P*:

$$\cos \Delta\psi_{L,v} = 0.832 \qquad \alpha_{o,v} = 0 \qquad \beta_{o,v} = 18.535\,\mathrm{m}$$

example g-2 ring II

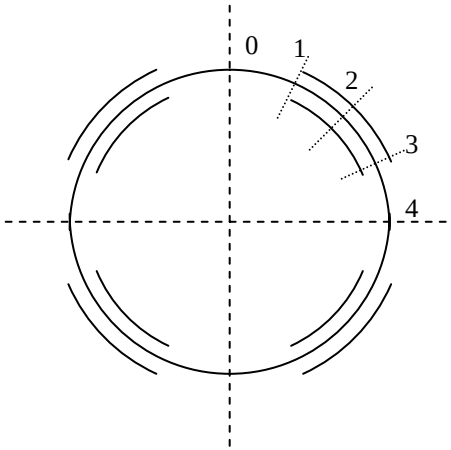

transport from 0 to 1

$$\begin{pmatrix} \alpha \\ \beta \\ \gamma \end{pmatrix} = \begin{pmatrix} 0 & -\frac{1}{2} & -s \\ 1 & s & s^2 \\ 0 & 0 & 1 \end{pmatrix} \begin{pmatrix} c_1 \\ c_2 \\ c_3 \end{pmatrix}$$

set s = 0 at 0 and solve for constants in terms of CLS parameters

$$\begin{pmatrix} c_1 \\ c_2 \\ c_3 \end{pmatrix} = \begin{pmatrix} 0 & 1 & 0 \\ -2 & 0 & 0 \\ 0 & 0 & 1 \end{pmatrix} \begin{pmatrix} \alpha_0 \\ \beta_0 \\ \gamma_0 \end{pmatrix}$$

example g-2 ring III

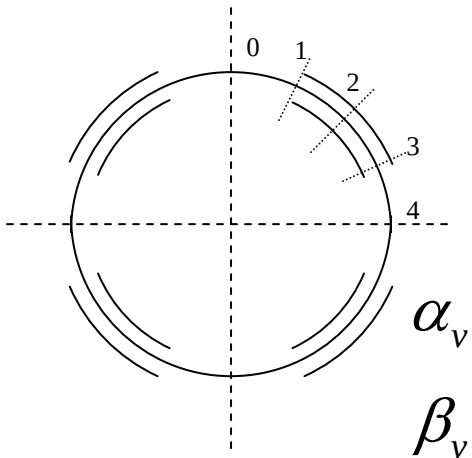

transport from 0 to 1

$$\alpha_v(s) = -0.0540\ \mathrm{m}^{-1} s$$

$$\beta_v(s) = 18.535\ \mathrm{m} + 0.0540\ \mathrm{m}^{-1} s^2$$

$$\gamma_v(s) = 0.0540\ \mathrm{m}^{-1}$$

$$\psi_v(s) = \int_0^s \frac{ds}{18.535\ \mathrm{m} + 0.0540\ \mathrm{m}^{-1} s^2}$$

at s_1 evaluate CLS functions
and use as initial conditions for next section

example g-2 ring IV

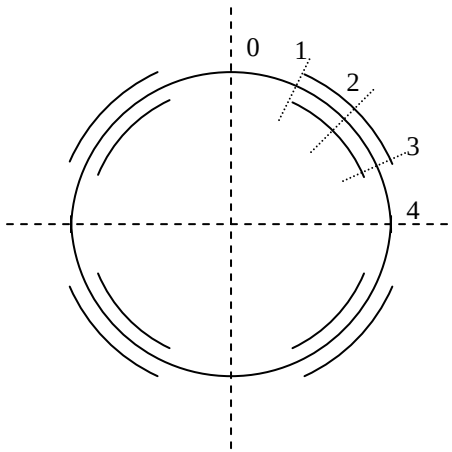

transport from 1 to 3

$$\begin{pmatrix} \alpha \\ \beta \\ \gamma \end{pmatrix} = \begin{pmatrix} 0 & \sqrt{K}\sin\sqrt{4K}s & -\sqrt{K}\cos\sqrt{4K}s \\ 1 & \cos\sqrt{4K}s & \sin\sqrt{4K}s \\ K & -K\cos\sqrt{4K}s & -K\sin\sqrt{4K}s \end{pmatrix} \begin{pmatrix} c_1 \\ c_2 \\ c_3 \end{pmatrix}$$

set $s = s_1$ and solve for constants in terms of CLS parameters at *s1*

$$\begin{pmatrix} \alpha_1 \\ \beta_1 \\ \gamma_1 \end{pmatrix} = \begin{pmatrix} 0 & \sqrt{K_v}\sin\sqrt{4K_v}s_1 & -\sqrt{K_v}\cos\sqrt{4K_v}s_1 \\ 1 & \cos\sqrt{4K_v}s_1 & \sin\sqrt{4K_v}s_1 \\ K_v & -K_v\cos\sqrt{4K_v}s_1 & -K_v\sin\sqrt{4K_v}s_1 \end{pmatrix} \begin{pmatrix} c_1 \\ c_2 \\ c_3 \end{pmatrix}$$

example g-2 ring V

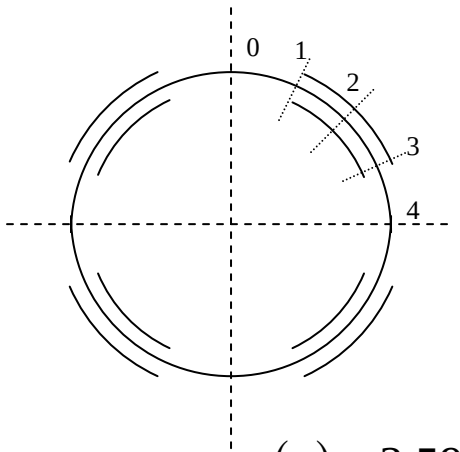

transport from 1 to 2

$$\alpha_v(s) = 3.590\,\mathrm{m}^{-1}\sqrt{K_v}\sin\left(\sqrt{4K_v}s\right) - 4.430\,\mathrm{m}^{-1}\sqrt{K_v}\cos\left(\sqrt{4K_v}s\right)$$

$$\beta_v(s) = 13.791\,\mathrm{m} + 3.590\,\mathrm{m}\cos\left(\sqrt{4K_v}s\right) + 4.430\,\mathrm{m}\sin\left(\sqrt{4K_v}s\right)$$

$$\gamma_v(s) = 13.743\,\mathrm{m}\,K_v - 3.590\,\mathrm{m}\,K_v\cos\left(\sqrt{4K_v}s\right) - 4.430\,\mathrm{m}\,K_v\sin\left(\sqrt{4K_v}s\right)$$

$$\psi_v(s) = \int_{s_1}^{s}\frac{ds}{13.743\,\mathrm{m} + 3.590\,\mathrm{m}\cos\left(\sqrt{4K_v}s\right) + 4.430\,\mathrm{m}\sin\left(\sqrt{4K_v}s\right)} + 0.169$$

$$K_v = \frac{n}{R^2} = 0.00634\ \mathrm{m}^{-2}$$

at s_3 evaluate CLS functions
and use as initial conditions for next section, etc.

results for g-2 ring I

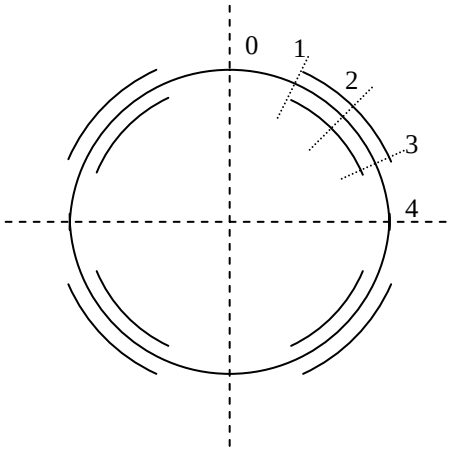

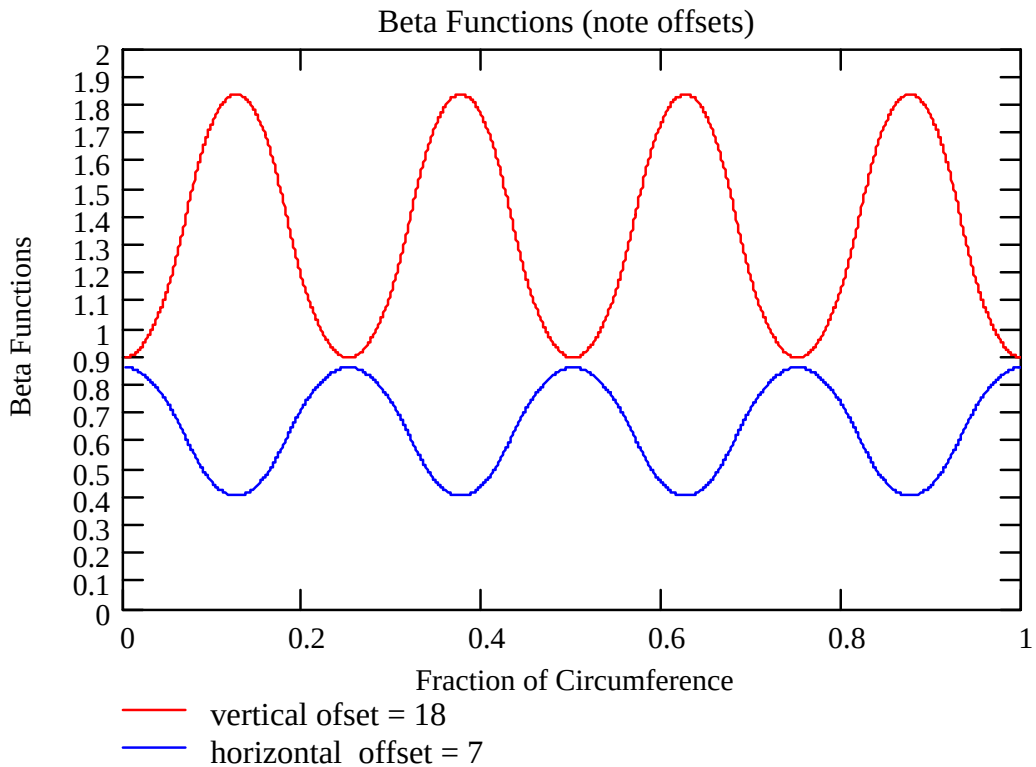

variation in beam envelope ~3%

$$y = A\sqrt{\beta}\cos(\psi - \phi)$$

results for g-2 ring II

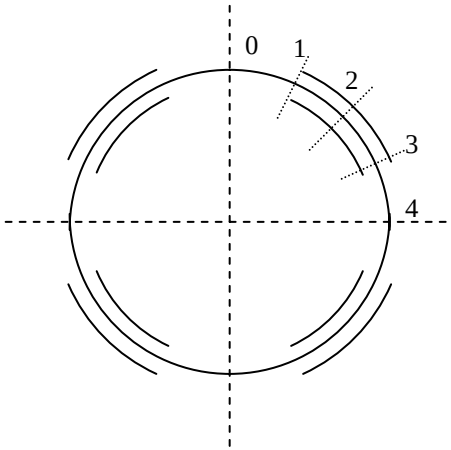

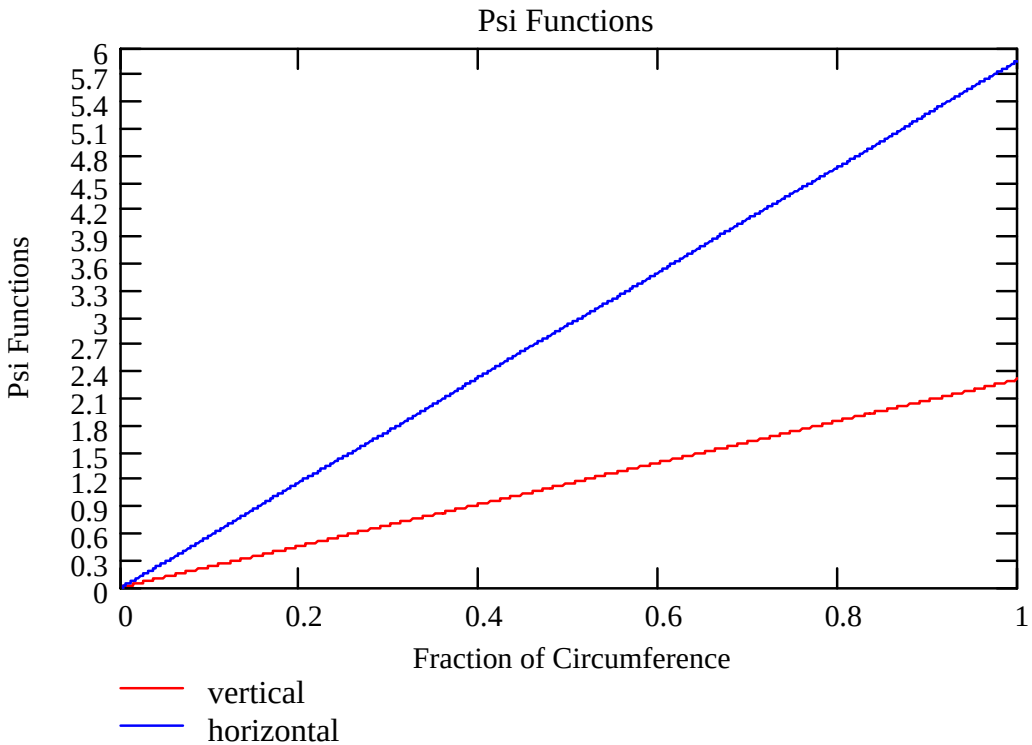

phase advance appears linear with *s*

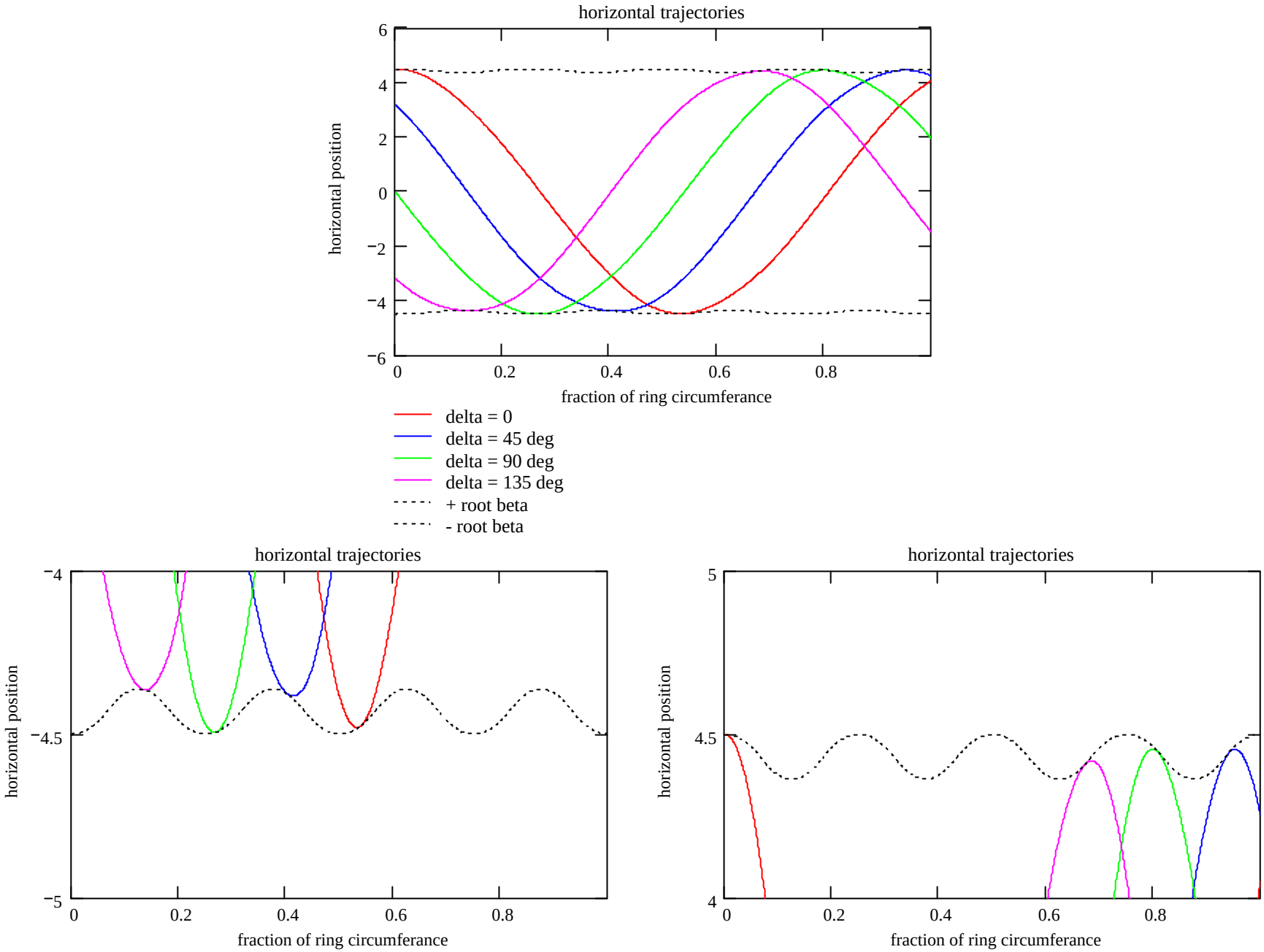
horizontal trajectories
horizontal position
fraction of ring circumferance
6
4
2
0
−2
−4
−6
0
0.2
0.4
0.6
0.8
delta = 0
delta = 45 deg
delta = 90 deg
delta = 135 deg
+ root beta
- root beta
horizontal trajectories
horizontal position
fraction of ring circumferance
−4
−4.5
−5
0
0.2
0.4
0.6
0.8
horizontal trajectories
horizontal position
fraction of ring circumferance
5
4.5
4
0
0.2
0.4
0.6
0.8

IDA program output I - g-2 ring

IDA

Auto

```
E<dit,F<it,G<et,S<ave,W<rite,T<ype,M<ult,C<ycle,I<ntegrals,P<lot,Q<uit
              g-2 ring of BNL E821
Parameters for  g-2 ring  in pathway                    g-2\
       Number of elements =   7       linelength =     44.686
  Name            Length       Grad        Rho      Ent. angle   Exit angle
  1 MAG1            3.1653    0.000000      7.1120      0.0000       0.0000
  2 MAG2            4.8409   -0.006342      7.1120      0.0000       0.0000
  3 MAG1            3.1653    0.000000      7.1120      0.0000       0.0000
  4 MAG1            3.1653    0.000000      7.1120      0.0000       0.0000
  5 MAG2            4.8409   -0.006342      7.1120      0.0000       0.0000
  6 MAG1            3.1653    0.000000      7.1120      0.0000       0.0000
  7 REFL
```

IDA program output II - g-2 ring

IDA

Auto

```
Lattice functions for line---g-2 ring                          7:34      3/ 3/2001
*****************************************************************************************

Element     Alpha(h) Beta(h) Psi(h)  Alpha(v) Beta(v)   Psi(v)      Xp    Xpdot
  1 MAG1    -0.0000   7.8915  0.000   0.0000  18.5349  0.000   8.3488   0.0000
  2 MAG2     0.0810   7.6168  0.406  -0.1708  19.0754  0.169   8.2283  -0.0749
  3 MAG1    -0.0810   7.6168  1.053   0.1708  19.0754  0.419   8.2283   0.0749
  4 MAG1     0.0000   7.8915  1.459   0.0000  18.5349  0.588   8.3488  -0.0000
  5 MAG2     0.0810   7.6168  1.865  -0.1708  19.0754  0.758   8.2283  -0.0749
  6 MAG1    -0.0810   7.6168  2.512   0.1708  19.0754  1.008   8.2283   0.0749
  7 REFL    -0.0000   7.8915  2.918   0.0000  18.5349  1.177   8.3488  -0.0000
            -0.0000   7.8915  5.836  -0.0000  18.5349  2.354   8.3488   0.0000

Line length =     44.6862   Bending angle =     6.2832
Horizontal phase =     5.8356  Vertical phase =     2.3537
Type any character to return
```